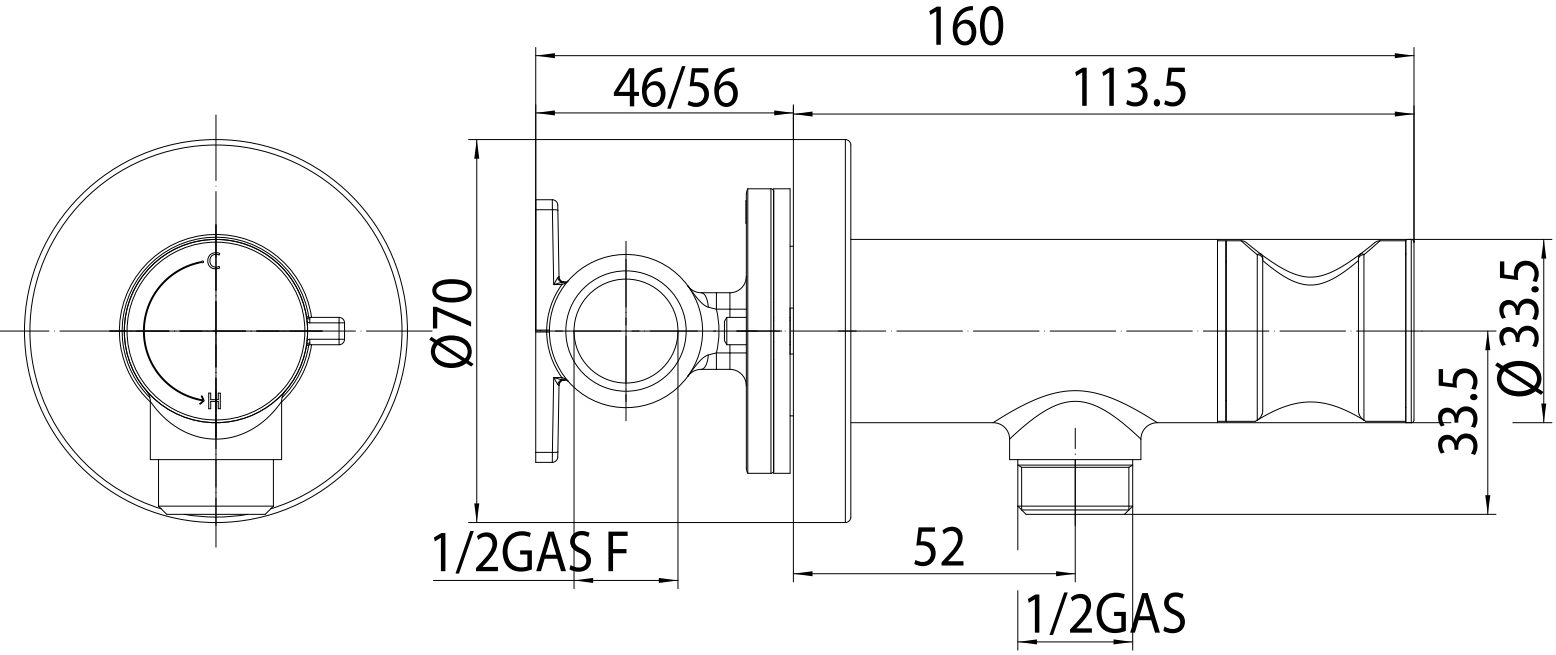
160
46/56
113.5
Ø70
Ø 33.5
33.5
1/2GAS F
52
1/2GAS
C
H